Guitar Fretboard Notes Chart.

Every note on the guitar neck, open to the 12th fret: all of them, the natural notes, and the sharps and flats.

Free printable · A2

FOUNDATIONS

Every Note on the Fretboard

Standard tuning, low to high: E A D G B E. Each fret is a semitone, so after 12 frets every string is back on its own note, an octave higher.

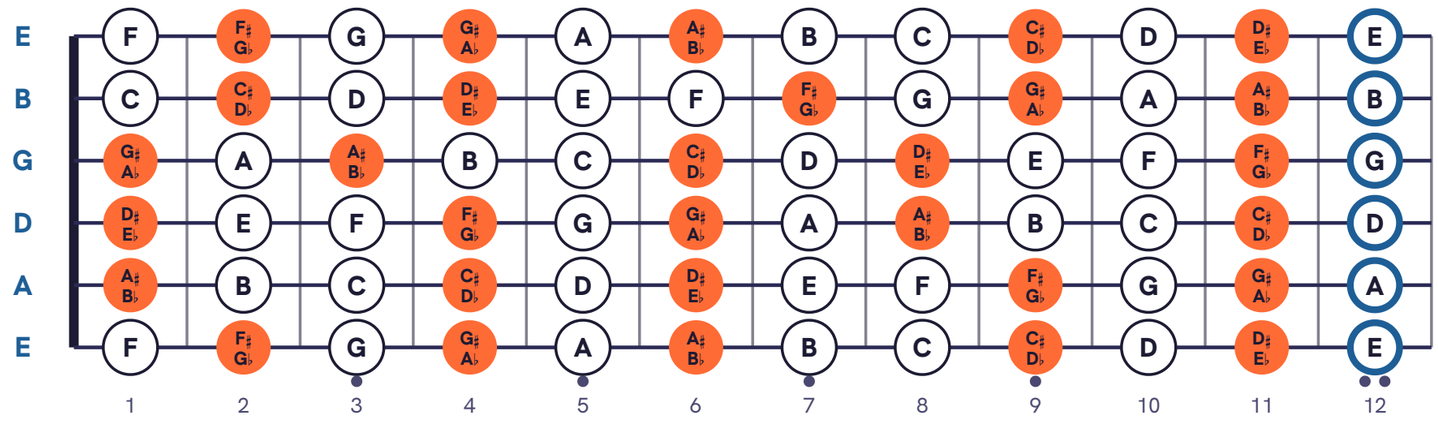

White dots: the natural notes. Coloured dots: the sharps and flats, with both names (F♯ is the same note as G♭). The open strings are named on the left; at the 12th fret each string is back on its own note.

FOUNDATIONS

The Natural Notes

Just the letters A to G: learn these first. E–F and B–C sit on neighbouring frets; every other pair has a fret between.

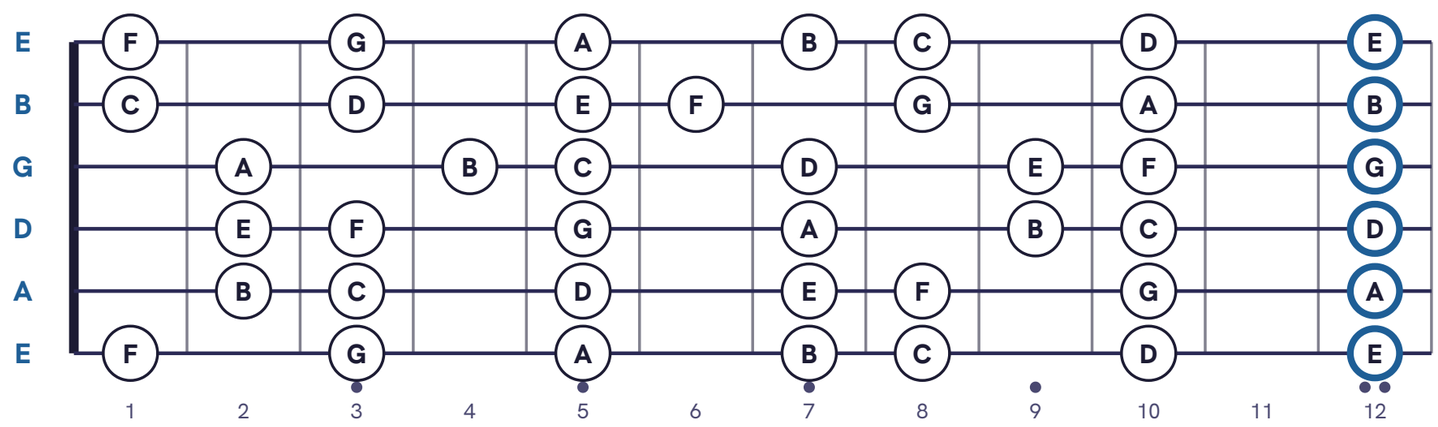

At the 12th fret (ringed) each string is back on the note it is named for.

FOUNDATIONS

Sharps and Flats

The notes between the letters. Each has two names: a fret above G is G♯, the same fret below A is A♭. Which name you use depends on the key.

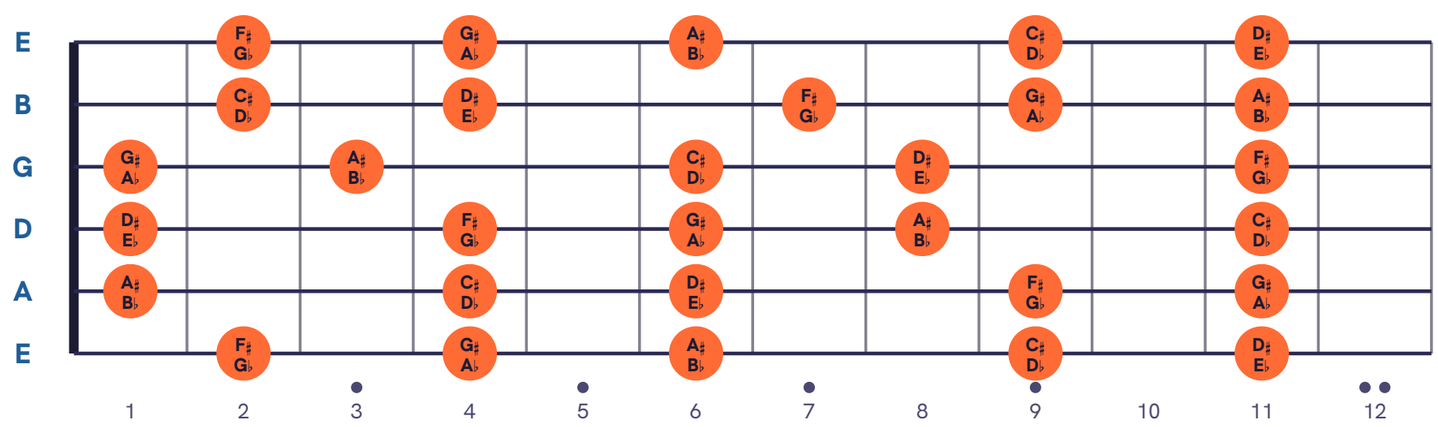

Five sharps or flats in every 12 frets, on every string.

PRACTICE TIP

Say the note names out loud as you read.

FOUNDATIONS

How to Learn the Fretboard

Five ways to find any note without counting every fret.

Start on the low E and A strings

The roots of most barre chords sit on these two strings. Say the natural notes as you play up each one.

Low E string

E_0 F_1 G_3 A_5 B_7 C_8 D_{10} E_{12}

Use the dots

Learn the notes at the 3rd, 5th, 7th and 9th fret dots first, then fill in between.

A string

3 **C** · 5 **D** · 7 **E** · 9 **F♯/G♭**

Octaves: two strings up, two frets on

From the low E or A string, the same note an octave higher is two strings up and two frets on. From the D or G string, the B string adds a fret: go three.

G Low E string, fret 3 → **G** D string, fret 5
C A string, fret 3 → **C** G string, fret 5
E D string, fret 2 → **E** B string, fret 5

The 5th fret is the next open string

Fret 5 on one string is the next string open, except on the G string, where it is fret 4. That is how guitarists tune by ear.

A Low E string, fret 5 → **A** A string, open
B G string, fret 4 → **B** B string, open

After the 12th fret, start again

The 12th fret is the open string an octave higher, so the 15th fret matches the 3rd, and so on.

G: fret 3 = 15

PRACTICE TIP

Practise slowly. Speed comes from playing it right, not from playing it fast.

trebly

Read it. Write it. Hear it.

Free note-reading games and lessons at **trebly.fun**

Make your own poster
trebly.fun/posters