Guitar Fretboard Notes Chart.

Every note on the guitar neck, open to the 12th fret: all of them, the natural notes, and the sharps and flats.

Free printable · Letter

FOUNDATIONS

Every Note on the Fretboard

Standard tuning, low to high: E A D G B E. Each fret is a semitone, so after 12 frets every string is back on its own note, an octave higher.

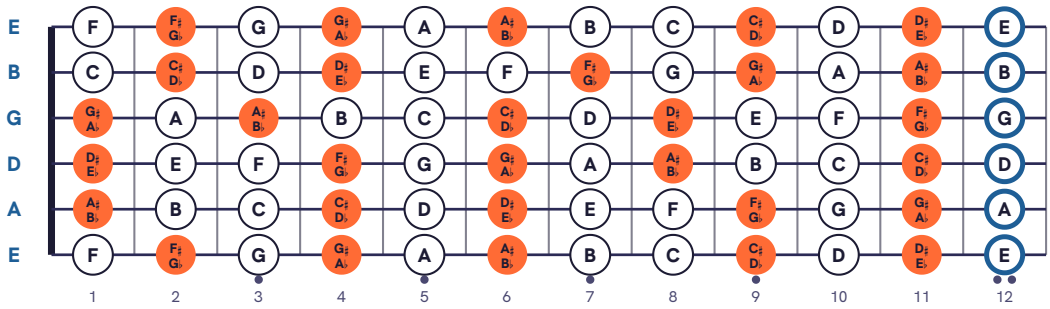

White dots: the natural notes. Coloured dots: the sharps and flats, with both names (F♯ is the same note as G♭). The open strings are named on the left; at the 12th fret each string is back on its own note.

FOUNDATIONS

The Natural Notes

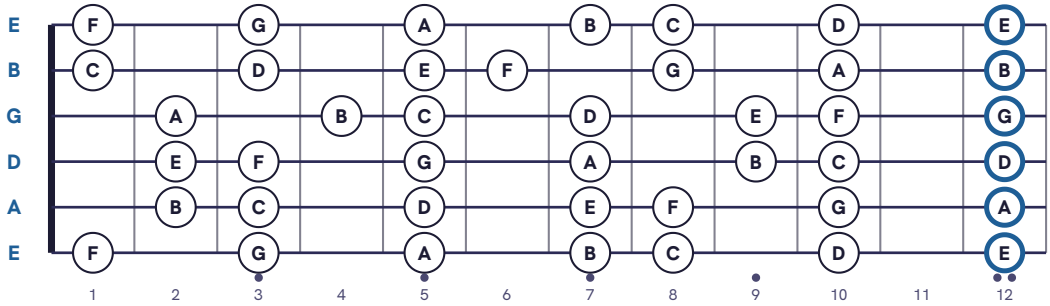

At the 12th fret (ringed) each string is back on the note it is named for.

FOUNDATIONS

Sharps and Flats

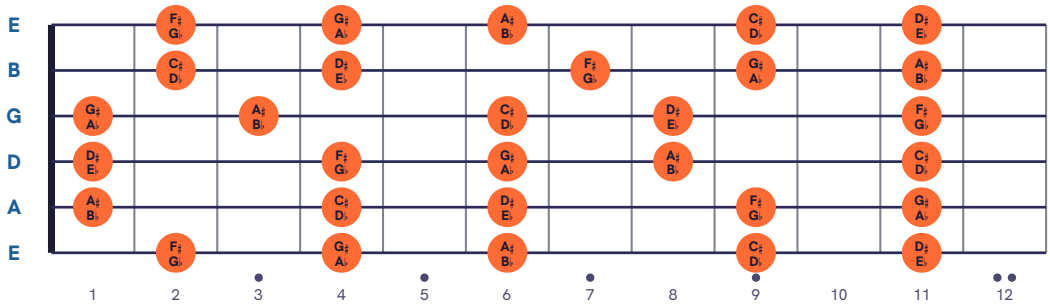

Five sharps or flats in every 12 frets, on every string.

trebly

Read it. Write it. Hear it.

Free note-reading games and lessons at **trebly.fun**

Make your own poster
trebly.fun/posters